brother

P-touch 1000

TZ TAPE

English / Español

USER'S GUIDE

www.P-touch.com

LN6001001
Printed in China

FCC NOTICE

This device complies with Part 15 of the FCC Rules. Operation is subject to the following two conditions: (1) this device may not cause harmful interference, and (2) this device must accept any interference received,including interference that may cause undesired operation.

This equipment has been tested and found to comply with the limits for a Class B digital device, pursuant to Part 15 of the FCC Rules. These limits are designed to provide reasonable protection against harmful interference in a residential installation. This equipment generates, uses, and can radiate radio frequency energy and, if not installed and used in accordance with the instructions, may cause harmful interference to radio communications. However, there is no guarantee that interference will not occur in a particular installation. If this equipment does cause harmful interference to radio or television reception, which can be determined by turning the equipment off and on, the user is encouraged to try to correct the interference by one or more of the following measures:

- Reorient or relocate the receiving antenna.
- Increase the separation between the equipment and receiver.
- Connect the equipment to an outlet on a circuit different from that to which the receiver is connected.
- Consult the dealer or an experienced radio/TV technician for help.
- Changes or modifications not expressly approved by Brother Industries, Ltd. could void the user's authority to operate the equipment.

Patent numbers and patent publication numbers which are related to this product are as below:

USP4839742 USP4976558 USP5009530 USP5120147
USP4927278 USP4983058 USP5069557 USP5314256

GENERAL PRECAUTIONS

- **Use only Brother TZ tapes with this machine. Do not use tapes that do not have the TZ mark.**
- **Do not pull on the tape being fed from the P-touch, otherwise the tape cassette may be damaged.**
- Do not attempt to cut the tape while printing or feeding since this will damage the tape.
- Do not clean the machine with alcohol or other organic solvents. Only use a soft, dry cloth.
- Remove the batteries and disconnect the AC adapter if you do not intend to use the machine for an extended period of time.
  Note: If power is disconnected for more than three minutes, all text shown in the display and any text files stored in the memory will be lost. Language and unit settings will also be cleared.
- Do not put any foreign objects into or heavy objects on the machine.
- Do not expose the machine to extremely high temperatures or high humidity. Never leave it on the dashboard or in the back of your car.
- Avoid using the machine in extremely dusty places. Keep it out of both direct sunlight and rain.
- Do not leave any rubber or vinyl on the machine for an extended period of time, otherwise the machine may be stained.
- Do not touch the print head mechanism. If the head is touched, clean it immediately with a soft wipe (e.g. a cotton swab) to avoid permanent damage.
- To avoid injuries, do not touch the cutter's edge.
- **Use only the AC adapter designed exclusively for this machine. Use of any other adapter may void the warranty.**

SPECIFICATIONS

Dimensions:	4.32" (W) × 7.84" (D) × 2.2" (H) (108mm (W) × 196mm (D) × 55mm (H))
Weight:	0.74 lbs. (335g) (without batteries and tape cassette)
Power supply:	Six AAA size alkaline batteries or optional AC adapter (model AD-30)
Tape cassette:	Brother TZ tape 1/4" / 3/8" / 1/2" (width) (6mm, 9mm, 12mm (width))
Cutter unit:	TC-5 (replacement)

POWER SUPPLY & TAPE CASSETTES

❶ **Remove the back cover by pressing in the rough area at the top end of the machine and then flip away from the machine.**
If a tape cassette is already installed, remove it by pulling it straight up. Also, if batteries are already installed, remove them.

❷-1 **Insert the batteries into the battery compartment with the positive end of the bottom three batteries pointing away from the cutter lever, and the positive end of the top three batteries pointing toward the tape cutter lever.**
Always replace all six batteries at the same time using brand new ones.

❷-2 **Insert a tape cassette, making sure that it snaps into place.**
- Make sure that the end of the tape feeds under the tape guides.
- Be sure to remove the paper tab when installing a new tape cassette.
- If the ink ribbon is loose, use your finger to wind the toothed wheel in the direction of the arrow on the cassette.
- Use only Brother TZ tapes with this machine.

❸ **Attach the back cover by inserting the two hooks at the bottom into the slots on the machine, then pushing down firmly on the cover until it snaps into place.**
After you have installed the tape, feed the tape (see FEEDING) once and then push in the tape cutter lever to cut the tape.

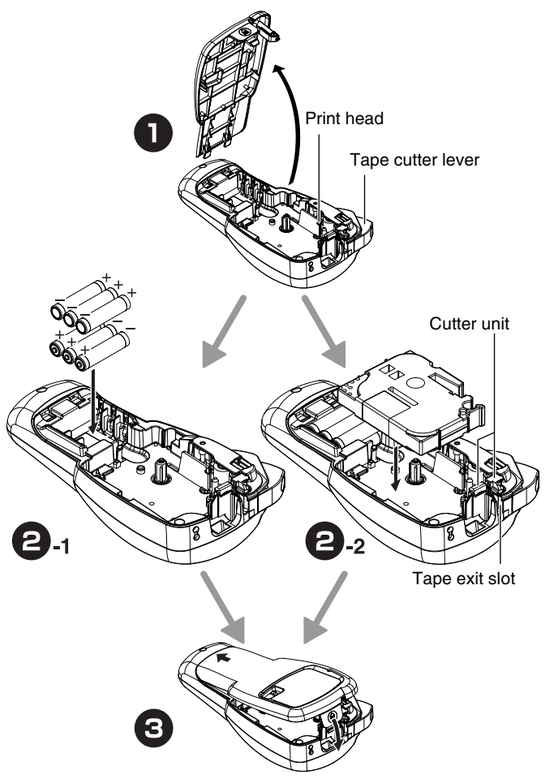

Optional AC adapter (model AD-30)

❶ **Insert the plug on the adapter cord into the adapter jack on the bottom end of the machine.**

❷ **Plug the other end of the adapter to the nearest standard electrical outlet.**

Cutter unit (replacement)

If the cutter blade becomes blunt after repetitive use and the tape cannot be cut cleanly, replace with new cutter unit (stock no. TC-5) by obtaining from an authorized brother dealer.

KEYBOARD & LCD

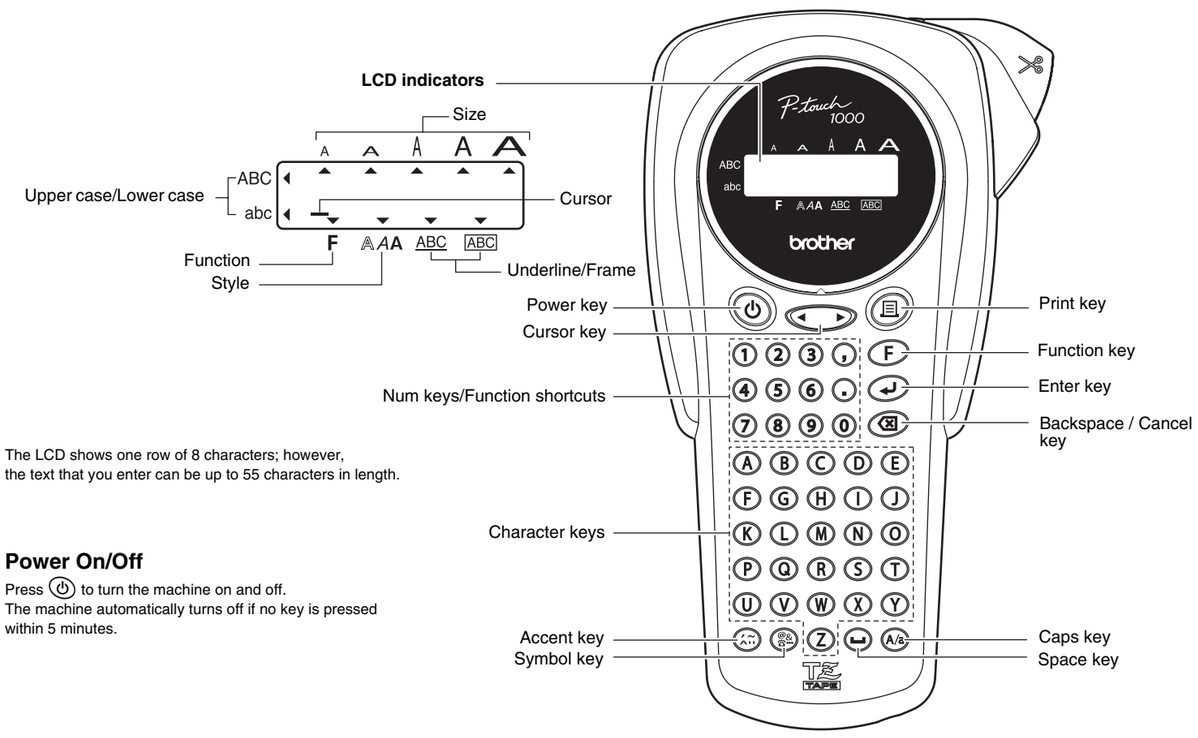

The LCD shows one row of 8 characters; however, the text that you enter can be up to 55 characters in length.

Power On/Off

Press ⏻ to turn the machine on and off.
The machine automatically turns off if no key is pressed within 5 minutes.

GETTING STARTED

❶ Start your machine

Supply power by using six AAA batteries or the optional AC adapter, and then press ⏻.

❷ Set the language (English/French/German)

1.ENG? →

Choose a language with ◄► and press ↵.

ENGLISH | FRANÇAIS | DEUTSCH

Check the display and press ↵. (To cancel, press ⌫.)

❸ Set the unit (mm/inch)

1.mm? →

Choose a unit with ◄► and press ↵.

mm | inch

Check the display and press ↵. (To cancel, press ⌫.)

NOTE:
- You can also display the languages and units by pressing the corresponding Num keys (1-3).
- The available accented characters depend on the language setting.

NOTE:
- To cancel operations, press ⌫.
- To delete entries backward, press ⌫.
- **To initialize the settings, turn off the machine and then while holding down F and ⌫, press ⏻ to turn the machine back on. Finally, release F and ⌫.**

MAKING TEXT

Switching UPPER CASE/LOWER CASE

A/a

Upper case
ABC
abc
ABC_

Lower case
ABC
abc
abc_

Making A TWO LINE LABEL

Move the cursor to where the second line starts and press ↵.

NOTE: Use either 9 mm or 12 mm wide tape for two line labels.

Display
ABC↵DEF_

Label image
ABC
DEF

Entering SYMBOLS

A/a → B → ◄► → ↵

Group	Symbols	Group	Symbols
A	? ! ″ ' : ; – _	F	→ ← ↑ ↓ ☞ ☜
B	\ / & ¿ ¡ ~ § •	G	° $ £ € ¢ Fr ƒ ij
C	@ # ℅ ® © ™	H	ª º ß µ Ð ð Þ þ
D	+ − × ∗ ± = ÷	I	☎ ★
E	( ) [ ] < >		

NOTE:
- You can also display the symbols by pressing Sym / ◄►.
- To go to the next group, press Sym.
- To skip to a different group, press the corresponding character key of the group.
- You can also scroll the symbols in each group by pressing the corresponding character key of the group repeatedly.

Entering ACCENTED CHARACTERS

A/a → E → ◄► → ↵

Letter	Accented characters	Letter	Accented characters
A	Ä Á À Â Ã Å Æ	a	ä á à â ã å æ
C	Ç	c	ç
E	Ë É È Ê Ẽ	e	ë é è ê ẽ
I	Ï Í Ì Î	i	ï í ì î
N	Ñ	n	ñ
O	Ö Ó Ò Ô Õ Ø Œ	o	ö ó ò ô õ ø œ
U	Ü Ú Ù Û	u	ü ú ù û
		y	ÿ

NOTE:
- You can also display the characters by pressing A/a / ◄►.
- To go to the next letter group, press A/a.
- To skip to a different letter group, press the corresponding character key.
- You can also scroll the characters in each letter group by pressing the corresponding character key repeatedly.

DESIGNING LABELS

Setting FONT (F+1)

F → F/◄► FONT → ↵ → F/◄► OKLAHOMA → ↵

HELSINKI
HELSINKI

OKLAHOMA
OKLAHOMA

Setting SIZE (F+2)

F → F/◄► SIZE → ↵ → F/◄► SIZE3 → ↵

AUTO automatically adjusts the text size according to the tape width.

SIZE1
J.SMITH

SIZE2
J.SMITH

SIZE3
J.SMITH

SIZE4
J.SMITH

SIZE5
J.SMITH

NOTE:
- Two line labels are printed in SIZE1 regardless of the setting.
- Only AUTO, SIZE1 and SIZE2 can be used on 1/4" tapes.

Setting STYLE (F+3)

F → F/◄► STYLE → ↵ → F/◄► OUTLINE → ↵

NORMAL
J.SMITH

BOLD
J.SMITH

OUTLINE
J.SMITH

SHADOW
J.SMITH

ITALIC
J.SMITH

I+BOLD (ITALIC + BOLD)
J.SMITH

I+OUTL (ITALIC + OUTLINE)
J.SMITH

I+SHADOW (ITALIC + SHADOW)
J.SMITH

VERTICAL
J.SMITH

MIRROR
J.SMITH

NOTE:
- Two line texts are printed in NORMAL regardless of the setting.
- Use clear tape in MIRROR, so the labels appear on the other side when stuck on glass, windows or other transparent surfaces.

Setting UNDERLINE/FRAME (F+4)

F → F/◄► UNDL/FRM → ↵ → F/◄► ROUND → ↵

OFF
ABC

UNDL (Underline)
ABC

ROUND
ABC

BANNER
ABC

WOODEN
ABC

VINE
ABC

NOTE: No underline or frame is set to texts in VERTICAL style.

Setting TAB (F+5)

You can make aligned texts by setting tabs.

Example: To set a tab between "abc" and "d"

◄► abcd → F → F/◄► TAB → ↵ abc d

Label image
abc d
Tab

NOTE: The cursor should be positioned where you set a tab.

Setting TAB LENGTH (0.0" - 4.0") (F+6)

F → F/◄► TAB LEN → ↵ → ◄► 2.5" → ↵

NOTE: You can also select the length by entering the length with Num keys.

Setting LABEL LENGTH (AUTO/1.6" - 11.8") (F+7)

F → F/◄► LENGTH → ↵ → ◄► 8.0" → ↵

NOTE:
- You can also select the length by entering the length with Num keys.
- To return to AUTO, press any alphabet key or ⌫.

Using AUTO FORMAT (F+8)

You can choose label length from six formats to create labels for various applications.

F → F/◄► A/F → ↵ → F/◄► CD CASE → ↵

LCD	Application	Length	LCD	Application	Length
VCR VHS	VCR VHS	5.5"	FILE TAB	File Tab	2.8"
FD 3.5"	3.5" Floppy Disk	2.7"	AUDIO	Audio Cassette	3.5"
CD CASE	CD	3.9"	VIDEO 8	VCR 8mm (Video 8)	3.6"

To CLEAR (F+0)

All text and settings will be cleared.

F → F/◄► CLEAR → ↵

PRINTING

TEXT PREVIEW (F+Preview)

You can preview the text before printing.

F → F/◄► PREVIEW → ↵

NOTE:
- The LCD shows the whole text and the label length (mm/inch), then returns to the original text.
- Only the text can be previewed, but not the font, style, size, underline/frame or any additional features.

FEEDING (TAPE FEED) (F+␣)

F → F/◄► FEED → ↵

PRINTING

Preview

NOTE:
- To cut off the label, push in the tape cutter lever on the upper-right corner of the machine.
- To prevent damage to the tape, do not try to cut while the message PRINT or FEED is displayed.

TAPE MARGIN (F+.)

F → F/◄► MARGIN → ↵ → F/◄► FULL → ↵

FULL/HALF/NARROW is for leaving equal margins on both sides of the text.

NOTE: Cut along the printed dots (:) with scissors so the text is centered in the label.

FULL
ABC
1" 1"

HALF
ABC
1/2" 1/2"

NARROW
ABC
1/6" 1/6"

CHAIN is for printing more than 1 copy of a label with minimum margin <e.g. 1>. You can also create a label containing texts in various styles; print a text in one style, and before feeding, enter the second text in another style <e.g. 2>.

NOTE: **FEED THE TAPE BEFORE USING THE CUTTER (see FEEDING/PRINTING). Otherwise A PART OF THE TEXT MAY BE CUT OFF. Do not try to pull the tape since this may damage the tape cassette.**

CHAIN

<e.g. 1>
ABC ABC ABC
(feed & cut)

<e.g. 2>
ABC ABC DEF
(feed & cut)

Print Option/REPEAT PRINTING (F+,)

You can print up to 9 copies of each label.

F → F/◄► PRINT OP → ↵ → F/◄► REPEAT → ↵ 1-9? 1 → F/◄► 1-9? 8 → ↵

NOTE:
- When the tape margin is set to CHAIN, **FEED THE TAPE BEFORE USING THE CUTTER (see FEEDING/PRINTING). Otherwise A PART OF THE TEXT MAY BE CUT OFF. Do not try to pull the tape since this may damage the tape cassette.**
- When the tape margin is set to FULL/HALF/NARROW, cut along the printed dots (:) with scissors to separate the labels.

Print Option/NUMBERING (F+,)

You can print many copies of the same text while increasing a selected number by 1 after each label is printed.

Example: To print copies of a label containing a serial number (0123, 0124 and 0125)

◄► 0123 → F → F/◄► PRINT OP → ↵ → F/◄► NUMBER → ↵ 1-9? 3 → F/◄► 1-9? 5 → ↵

NOTE:
- The last number that will be printed must be larger than the number selected in the text, otherwise the message ERROR appears.
- When the tape margin is set to CHAIN, **FEED THE TAPE BEFORE USING THE CUTTER (see FEEDING/PRINTING). Otherwise A PART OF THE TEXT MAY BE CUT OFF. Do not try to pull the tape since this may damage the tape cassette.**
- When the tape margin is set to FULL/HALF/NARROW, cut along the printed dots (:) with scissors to separate the labels.

MEMORY (F+9)

You can store up to 9 frequently used text files and recall them to create labels more quickly and easily. (Total memory size: about 300 characters.)

F → F/◄► MEMORY → ↵ → STORE / RECALL / DELETE

To STORE;
F/◄► STORE → ↵ 1-9? → ◄► 3? → ↵

To RECALL;
F/◄► RECALL → ↵ 1-9? → ◄► 3? P-TOU → ↵

To DELETE;
F/◄► DELETE → ↵ 1-9? → ◄► 3? P-TOU → ↵

NOTE:
- When the memory is full, delete one or more files and then store the new file.
- You can also choose a file number by pressing the corresponding Num key (1-9).

FUNCTION SHORTCUTS (F+...)

In addition to the basic steps to search for a function, PT-1000 provides you with function shortcuts so you can easily jump to a frequently used function just by pressing F and the shortcut key shown in the table below. To confirm, press ↵ (or the shortcut key again).

Key	LCD message	Function	Key	LCD message	Function
①	FONT	Character font	⑧	A/F	Auto Format
②	SIZE	Character size	⑨	MEMORY	Memory
③	STYLE	Print style	⓪	CLEAR	Clear text + style
④	UNDL/FRM	Underline/Frame	.	MARGIN	Tape margin
⑤	TAB	Tab setting	,	PRINT OP	Repeat/Numbering
⑥	TAB LEN	Tab length	Preview	PREVIEW	Text preview
⑦	LENGTH	Label length	␣	FEED	Tape feed

NOTE:
- PRINT OP contains two functions, REPEAT PRINTING and NUMBERING.
- For PREVIEW and FEED, press ↵ to preview/feed after the LCD message appears.

NOTE: **You can also refer to the chart engraved on the back of the machine.**

ERROR MESSAGE LIST

ERROR	An error occurred.
BATTERY	The batteries are weak.
BATTERY	The batteries are empty.
FULL	The maximum number of characters (55 characters) have already been entered or the memory is full.
LONG TXT	The text length exceeds the selected label length.

TROUBLESHOOTING

Problem	Solution
The display stays blank after you have turned on the machine.	• Check that the batteries are correctly inserted. • If the batteries are weak, replace them. • Check that the adapter is correctly connected.
The machine does not print, or the printed characters are blurred.	• Check that the tape cassette has been inserted correctly. • If the tape cassette is empty, replace it. • Check that the character size is appropriate for the width of the tape that is used.
The printed characters are not formed properly.	• If the batteries are weak, replace them.
Striped tape appears.	• The tape cassette is empty. Replace it.
The memory has cleared on its own.	• The batteries may be weak. Replace them.
A blank horizontal line appears through the printed label.	• There may be some dust on the print head. Remove the tape cassette and use a dry cotton swab to gently wipe the print head with an up-and-down motion.
The machine has "locked up" (i.e., nothing happens when a key is pressed, even though the machine is on).	• Turn off the machine, and then while holding down F and ⌫, press ⏻ to turn the machine back on. Finally, release F and ⌫. Note: The text and formats in the display and all text files stored in the memory are erased. Also, the language and unit settings will be cleared.