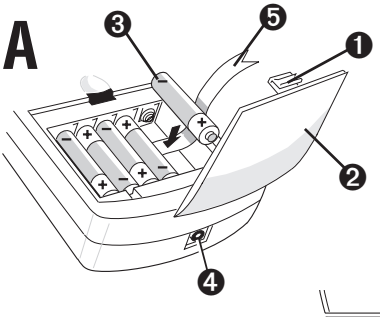
A
3
5
1
2
4

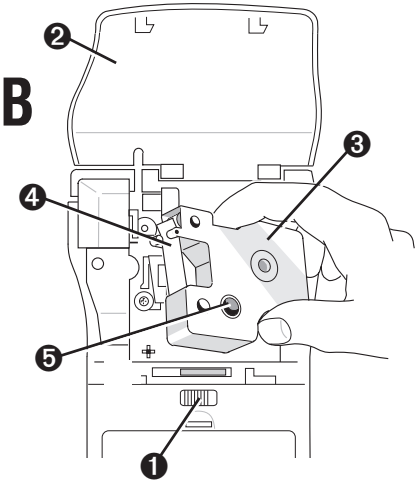
B
2
3
4
5
1

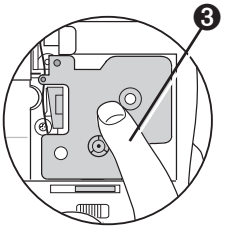
3

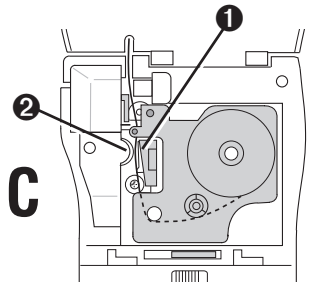
C
1
2

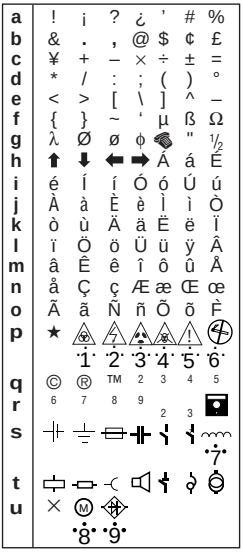
a
b
c
d
e
f
g
h
i
j
k
l
m
n
o
p
q
r
s
t
u

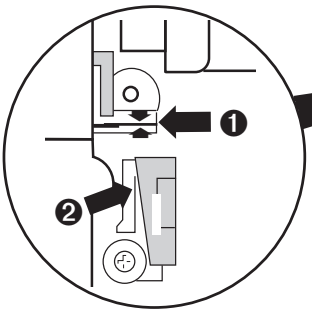
1
2

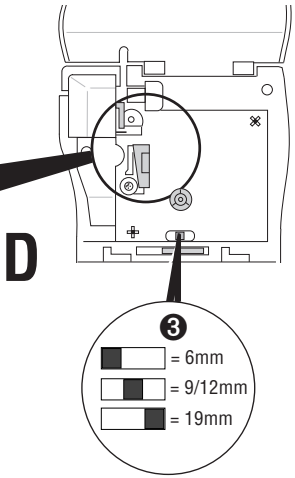
D
3
= 6mm
= 9/12mm
= 19mm

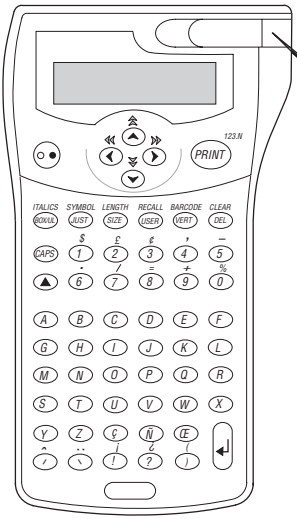
123/#
PRINT
ITALICS
SYMBOL
LENGTH
RECALL
BARCODE
CLEAR
BOX/ULL
JUST
SIZE
USER
VERT
DEL
CAPS

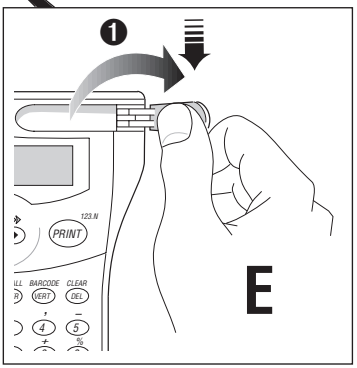
1
123/#
PRINT
BARCODE
CLEAR
VERT
DEL
E

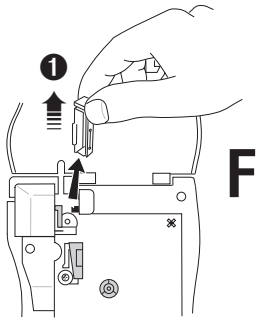
1
F

Introduction

The Dymo 2000 Electronic Labelmaker enables you to create a wide variety of high quality self-adhesive labels of up to 88 characters.

The Labelmaker uses 6mm (¼"), 9mm (⅜"), 12mm (½") or 19mm (¾") wide tape cassettes in a number of label colours. Labels are tab-cut for easy removal from the backing tape.

Text can be printed horizontally or vertically in a variety of sizes and styles and can be left-justified, right-justified or centred on the label.

Warranty Registration

Please complete the warranty registration card and return it to your national customer service address within seven days – see the warranty booklet for details.

Power Supply

BATTERIES

- Undo catch **A❶** then open and lift away battery compartment cover **A❷** – see page 2.
- Insert five size AA alkaline or re-chargeable nickel-cadmium batteries, observing the polarity markings **A❸**, and refit cover.
- Remove batteries (pull ribbon **A❺**) if the Labelmaker is to be unused for some time.

AC ADAPTOR

- Connect the AC adaptor to socket **A❹**. Inserting the adaptor plug disconnects the supply from the batteries.
- Unplug the AC adaptor from the Labelmaker before disconnecting the mains power to the adaptor, otherwise settings will be lost (see also ON/OFF ⊙•).

Changing the cassette

- Slide catch **B❶** as shown to open cassette door **B❷** – see page 2.
- Hold cassette **B❸** as shown and lift it straight up and out.
- Ensure tape and ribbon **B❹** are taut across mouth of cassette and tape passes between guide posts before installing as shown. If necessary, turn spool **B❺** clockwise to tighten ribbon.
- Check that cassette switch **D❸** is set for the cassette type – see page 2. A notch in the cassette will fit over the switch when it is set correctly.
- Insert cassette with tape and ribbon positioned as shown between print head **C❶** and pinch roller **C❷**.
- Push ***firmly*** **C❸** until cassette ***clicks*** into place. Ensure tape and ribbon are positioned correctly.

The Display

GB

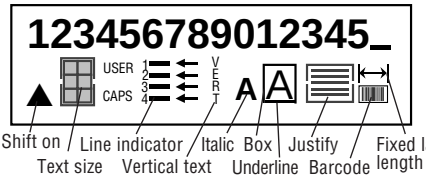

The display shows:

- Up to 15 characters, plus the cursor, at one time.
- Function indicators – as shown above.
- The display will flash if you press an incorrect key in a function sequence.

Function keys

ON/OFF ⊙•

Switches the power on and off.

- Switches off automatically after two minutes if no keys are pressed. The last label created will be retained and displayed when next turned on. In addition, any stored settings will be retained.

Note: If the batteries are removed for more than a few seconds, all text and stored settings will be lost. When power is restored, the display will show a flashing cursor (no text) and the settings will be medium height normal width text with ▲ and all other settings off.

CAPITALS CAPS

- Press for all subsequent characters to be in UPPER CASE (CAPITALS), as confirmed by the **CAPS** indicator in the display.
- Press again to cancel and return to lower case.

SHIFT KEY ▲

- Press and hold down ▲ before pressing an alphabet key to produce an UPPER CASE (CAPS) character.
- For dual purpose keys, press and hold ▲ first to produce the legend above the key.
- Pressing ▲ while CAPS is set will give lower case characters.

DELETE DEL

- Press to delete the character to the left of the cursor, or to exit certain function key operations.

CLEAR TEXT ▲ + CLEAR DEL

- Press to clear all the current text and cancel any fixed length setting, but leave the text size and other settings unchanged. Also use to exit or clear certain function key operations.

CURSOR KEYS ◄, ►, ▲ or ▼

- Press ◄ or ► to move the cursor along the text, one character at a time.

- Press and hold to scan quickly through the text.
- Press ▲ + ◀◀ or ▶▶ to move the cursor to the beginning or end of the line of text.
- When used in conjunction with certain function keys, use ◀ or ▶ to select options.
- To insert characters into the text, use ◀ or ▶ to position the cursor under the character to the right of the insertion point, then type in the characters required.
- Press ▲ or ▼ to move the cursor to the start of the previous or next line of a multi-line label.
- Press ▲ + ▲▲ or ▼▼ to move the cursor to the beginning or end of the label.

PRINTING (PRINT)

- Press (PRINT) to print the label.
- Use cutter lever **E❶** to release and tab-cut the label – see page 2.

INCREMENTAL PRINTING ▲ + (PRINT) 123.N

Prints the label, then increments a number label by 1, ready for the next print command. Note that barcode numbers are not incremented.

SPACE KEY ( )

- Press ( ) to insert a space into the text.

SYMBOLS ▲ + (JUST) SYMBOL

- Press to select a symbol character – see **SYMBOLS AND SPECIAL CHARACTERS** and the symbols table on page 2.

TEXT SIZE (SIZE)

- The display shows the current selection of text print size:

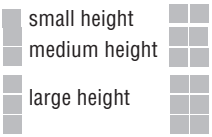

- Large height is available on 19mm labels only. Medium height is available on all except 6mm labels. Small height is available on all labels.
- Press (SIZE) repeatedly to select the size symbol required.

JUSTIFY (JUST)

Labels are normally printed with the text left-justified. On multi-line labels, press (JUST) to select left-justified, right-justified or centred text, as shown in the display. See also **LABEL LENGTH**.

VERTICAL TEXT (VERT)

- Rotates the text through 90° so that the label is printed > e ⊢ t ·– c a — — >, as confirmed by the **VERT** indicator in the display.
- Press again to cancel and return to horizontal text.

Note: Vertical text is not available on multi-line labels.

MULTI-LINE PRINTING

- Press ↵ to start the next line of text on a multi-line label, e.g.

  This is a two↵ line label in the display will be printed as:

This is a two line label	and the display will indicate 2 lines: 1 2 ←

Labels can be created as follows:

6mm	1 line small text	19mm	Up to 4 lines small text
9mm	Up to 2 lines small text		
9mm	1 line medium text	19mm	Up to 2 lines medium text
12mm	Up to 2 lines small text		
12mm	1 line medium text	19mm	1 line large text

The line indicator in the display will confirm the number of lines in the label.

BOXED/UNDERLINED PRINTING (BOX/UL)

The display shows the current selection.

- Press (BOX/UL) once to put a line box around the label (confirmed by the **A** indicator in the display).
- Press a second time to underline all the text on the label (confirmed by the **A** indicator in the display).
- Press a third time to cancel and return to normal text.

ITALIC ▲ + (BOX/UL) ITALICS

- Press once to print the label in *italic* text (confirmed by the ***A*** indicator in the display).
  Press again to cancel and return to normal text.

LABEL LENGTH ▲ + (SIZE) LENGTH

- Press to display the current label length. The length is normally calculated automatically, according to the length and size of the text on the label. The justify symbol will also be displayed.
- Press (DEL) to exit the length function without changing the length, or:
- Press (JUST) if necessary to select the justification required, as confirmed by the justify symbol in the display.
- Use ◀ or ▶ to increase (up to 5000mm max.) or decrease the length in 2mm steps. The display will flash if you try to make the label shorter than the text.
- If the length displayed is preceded by the **>** symbol, the length has already been fixed; the label is too short for the text and it will not print. Either press ▶ to increase the length in 2mm steps until the **>** symbol disappears, or press ▲ + (DEL) CLEAR to cancel fixed length; the label is now long enough for the text and can be printed.
- Press ↵ to fix the length for all subsequent labels, confirmed by the |<->| indicator in the display, or

- press (PRINT) to fix the new length and print the label.
- To cancel the fixed length and restore the automatic length, press (▲) + (LENGTH SIZE) followed by (▲) + (CLEAR DEL) (I<->I will go off) to cancel the fixed length, then press (DEL) to return to the current label.

PERSONALISED (USER) LABEL SETTINGS

This function enables you to store your favourite label settings in the memory and to recall them by pressing just a few keys.

To store personalised label settings:

- Make your personal settings, e.g.
  Small height, extended width text – ■■
  Underlined text – **A**
  Italic text – **A**
- Press (USER); the display will stop showing the current label text and will show your personalised settings.
- Press (↵) to store the settings in the memory (any settings previously stored will be replaced by these settings) and return to the current label, or
- Press (DEL) to exit and return to the current label (any settings previously stored will be unaffected).

To recall personalised settings:

- Press (▲) + (RECALL USER) (confirmed by the **USER** indicator in the display). The display will stop showing the current label text and the settings in the user memory will be recalled and displayed.
- Press (DEL) to exit (the user settings will remain stored in memory) and return to the current label, or
- Press (↵) to copy these settings into the label. Any previous settings made on the current label will be lost and replaced by the user settings.

Symbols and special characters

INTERNATIONAL CHARACTERS

To add a diacritical (accent) to create an international character, enter the character first, followed immediately by the diacritical, e.g. press (E) followed by (´) to get **é**.

To add a diacritical to an existing character, use (◄) or (►) to place the cursor under the character to be changed, then press the appropriate diacritical key.

SYMBOLS

Press (▲) + (SYMBOL JUST) to show symbols and special characters, some of which are not available direct from the keyboard. The display will show: **A-U?** or, if any symbols have been stored in the memory: **A-U / 1-9 ?** (see also '**PERSONALISED (USER) SYMBOLS**').

Each letter selects a line of symbol characters, as shown in the table on page 2.

Press (DEL) to cancel, or press a letter key 'A' to 'U' until you find the line of symbols required.

Use (◄) or (►) to select a symbol. Press (↵) to place the symbol in the label, or press (PRINT) to place it and print the label.

PERSONALISED (USER) SYMBOLS

You can store up to nine frequently used symbol characters in the memory and recall a personalised symbol by pressing just three keys.

To store a personalised symbol:

- Press (▲) + (SYMBOL JUST). The display will show: **A-U?** or, if any symbols have already been stored in the memory: **A-U / 1-9 ?**
- Press letter key 'A' to 'U' as required.
- Use (◄) or (►) to select a symbol (eg ✎).
- Press (USER).The display will change to show the selected symbol and **>1-9?** (eg ✎ **>1-9?**).
- Press a number between 1 and 9. The selected symbol will be stored in the user symbol memory with that number and will replace any symbol previously stored under that number.

To recall a personalised symbol:

- Press (▲) + (SYMBOL JUST); the display will show: **A-U/ 1-9 ?**.
- Press number key 1-9 as required. The display will show the stored symbol.
  Note: If you press a number which does not have a stored symbol, the display will flash once.
  Press another number key if necessary until the symbol required is displayed.
- Press (↵) to place the symbol in the label, or
- Press (DEL) to cancel and return to the current label.

PRINT CONTRAST — may be adjusted by pressing (▲) + (SYMBOL JUST) followed by space key ( ) to display the contrast symbols <- I I I I I +>.

Use (◄) or (►) to select lighter or darker print. Press (↵) to confirm the setting. The normal contrast level is the mid-setting.

Note: This function enables you to adjust the print quality under extreme temperature conditions.

BARCODES (▲) + (BARCODE VERT)

Barcodes can be printed on 19mm wide labels only and can be either full height or mixed with text on one or two lines.

To create a bar code:

- Press (▲) + (BARCODE VERT) to display the barcode type previously selected.
- Press (DEL) to cancel and return to the current label, or
- Use (◄) or (►) to step through the barcode types available: EAN 8, EAN13, UPC A, UPC E, CODE 39 and CODE 128.
- Press (↵) to select the barcode type displayed. The barcode symbol ▮▮▮ will appear in the display – see page 3.
- Enter the characters which will become the barcode, eg: 1234567.
- Press (↵) to return to the label.

Note that the barcode symbol will appear in the display whenever the cursor is positioned under barcode characters.

- To edit a barcode, press ▲ + BARCODE (VERT) ; the barcode characters only will be displayed and the barcode symbol will appear in the display.
- Press ↵ or ▲ + BARCODE (VERT) again to return to the label.

On a single line label, a bar code can be mixed with text which is small, medium or large size:

A two-line label always has small size text when it is mixed with a barcode.

Text entered before pressing ↵ followed by ▲ + BARCODE (VERT) , will result in text above the barcode:

Entering the text after pressing ↵ at the end of a barcode will produce text below the barcode:

Text can be underlined, eg:

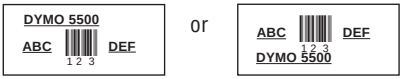

A box can be added around the complete label:

Cleaning

- Clean the cutter blade regularly: Remove the cassette, then press and hold down cutter lever **E❶** to expose cutter blade **D❶**, then use a cotton bud and alcohol to clean both sides of the blade. Release cutter lever **E❶**.
- Check and clean print head face **D❷** regularly using a cotton bud and alcohol ONLY.

Troubleshooting

No display

- check machine is on
- replace discharged batteries
- check AC adaptor.

No printing or poor text

- replace discharged batteries
- check tape cassette installed correctly
- clean the print head
- replace the tape cassette.

Tape jammed

- lift out tape cassette carefully
- remove/release jammed tape
- DO NOT cut the ink ribbon – turn spool **B❺** to tighten
- cut off excess label tape
- refit/replace the tape cassette.

Poor cutter performance

- clean the cutter blade regularly

Poor tab cuts

- replace tab cutter blade **F❶** – remove the cassette then locate the cutter block and pull hard upwards to remove.
  WARNING – the blade is extremely sharp!

No response to print key

- **!!!!!!!!** in the display indicates a printer jam. Press any key to return to normal display. Open the cassette compartment and free the jam.
- □□□□□□□□ flashing in the display indicates discharged batteries. Press any key to return to normal display. Replace the batteries.

No success?

- Call the customer service telephone number in your country – see the warranty booklet.
  In the USA, call 800-645-6051
  In Canada, call (905) 670-2222